PRACTICAL WORK BOOK

For Academic Session 2009

COMMUNICATION SYSTEMS II

(TC-492)

For

BE (EL/EE)

Name: _____

Roll Number: _____

Batch: _____

Department: _____

Year: _____

Department of Electronic Engineering

NED University of Engineering & Technology, Karachi

LABORATORY WORK BOOK

For The Course

TC-492 COMMUNICATION SYSTEMS II

Prepared By:

Mr. Tahir Malik (Lecturer)

Reviewed By:

Mr. Tahir Malik (Lecturer)

Approved By:

The Board of Studies of Department of Electronic Engineering

INTRODUCTION

Communication Systems II Practical Workbook covers a variety of experiments that are designed to aid the student in his profession and theory. The workbook is designed to reinforce the basic philosophies, processes and other building blocks of communications systems.

Most of the practicals covered here give the students more then a basic introduction to Communication systems. The practicals start gradually from the basics of modulation schemes in communication and move on to advance topics like telephone systems.

The practicals are based on modern trainers that incorporate a variety of functions to demonstrate to students the principles of Communication Systems techniques. The students will develop a profound interest in this course which will facilitate them whether it is in professional work or higher studies.

Telecommunications Laboratory

CONTENTS

Telecommunications Laboratory

CONTENTS

LAB SESSION 01

OBJECT:-

- To perform Amplitude Shift Keying (ASK) modulation and demodulation.
- To examine the effect of noise and attenuation on ASK systems.

EQUIPMENT REQUIRED:-

- Power unit PSU
- Module holder base
- Experiment module MCM3 1
- Oscilloscope.

THEORY:-

Amplitude shift keying -ASK

In this form of modulation the sine carrier takes 2 amplitude values, determined by the binary data signal. Usually the modulator transmits the carrier when the data bit is "1". It completely removes when the bit is"0". There are also ASK shapes called multi-level where the amplitude of the modulated signal takes more then 2 values.
The demodulation can be coherent or non coherent. In the first case, more complex as concern the circuit but more effective as against the noise effect, a product demodulator multiplies the ASK signal by the locally generated carrier. In the second case the envelope of the ASK signal is detected via diode. In both cases the detector is followed by a low pass filter which removes the residual carrier component and a threshold circuit which squares the data signal.

Bit Error rate- B.E.R

The B.E.R is the ratio of the error bits to the total received bits. Practically it tells the user how accurate the received data is.

BER = (No. of error Bits) / (Total No of received bits)

PROCEDURE:

Modulation

- Power on module. See Figure 1.
- Set the circuit in ASK mode, with 24-data bit source and without data coding (connect J1c-J3d-J4-J5-J6a ; set SW2=normal, SW3=24 bit, SW4=1200 ,SW6=ASK, SW8=BIT and ATT=min, NOISE=min
- Set an alternate data sequence 00/11 and push START

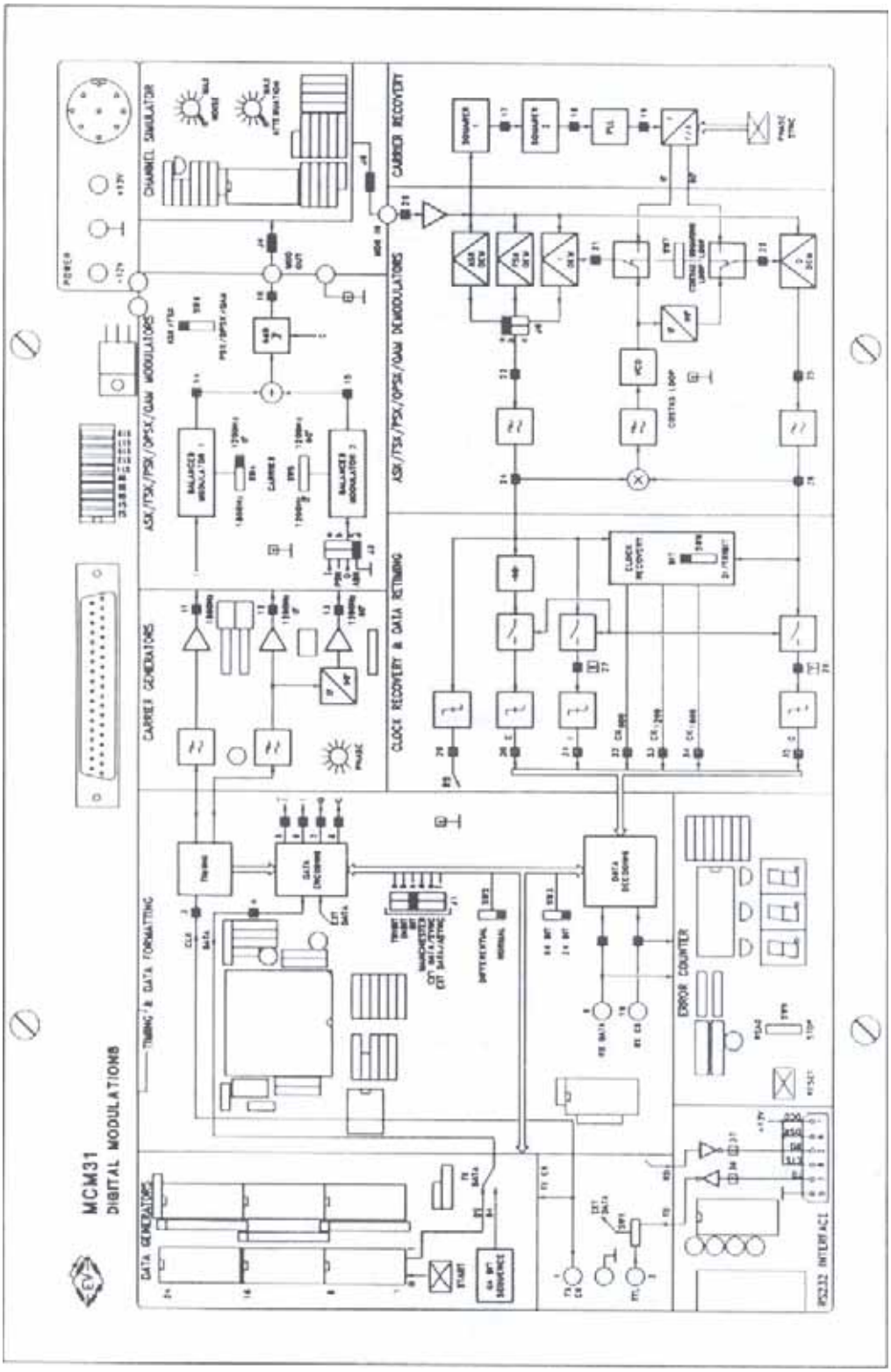
MCM31
DIGITAL MODULATIONS
CHANNEL SIMULATOR
CARRIER RECOVERY
ASK/FSK/PSK/QPSK/QAM MODULATORS
ASK/FSK/PSK/QPSK/QAM DEMODULATORS
CARRIER GENERATORS
CLOCK RECOVERY & DATA RETIMING
TIMING & DATA FORMATTING
DATA GENERATORS
ERROR COUNTER
RS232 INTERFACE

Figure 1

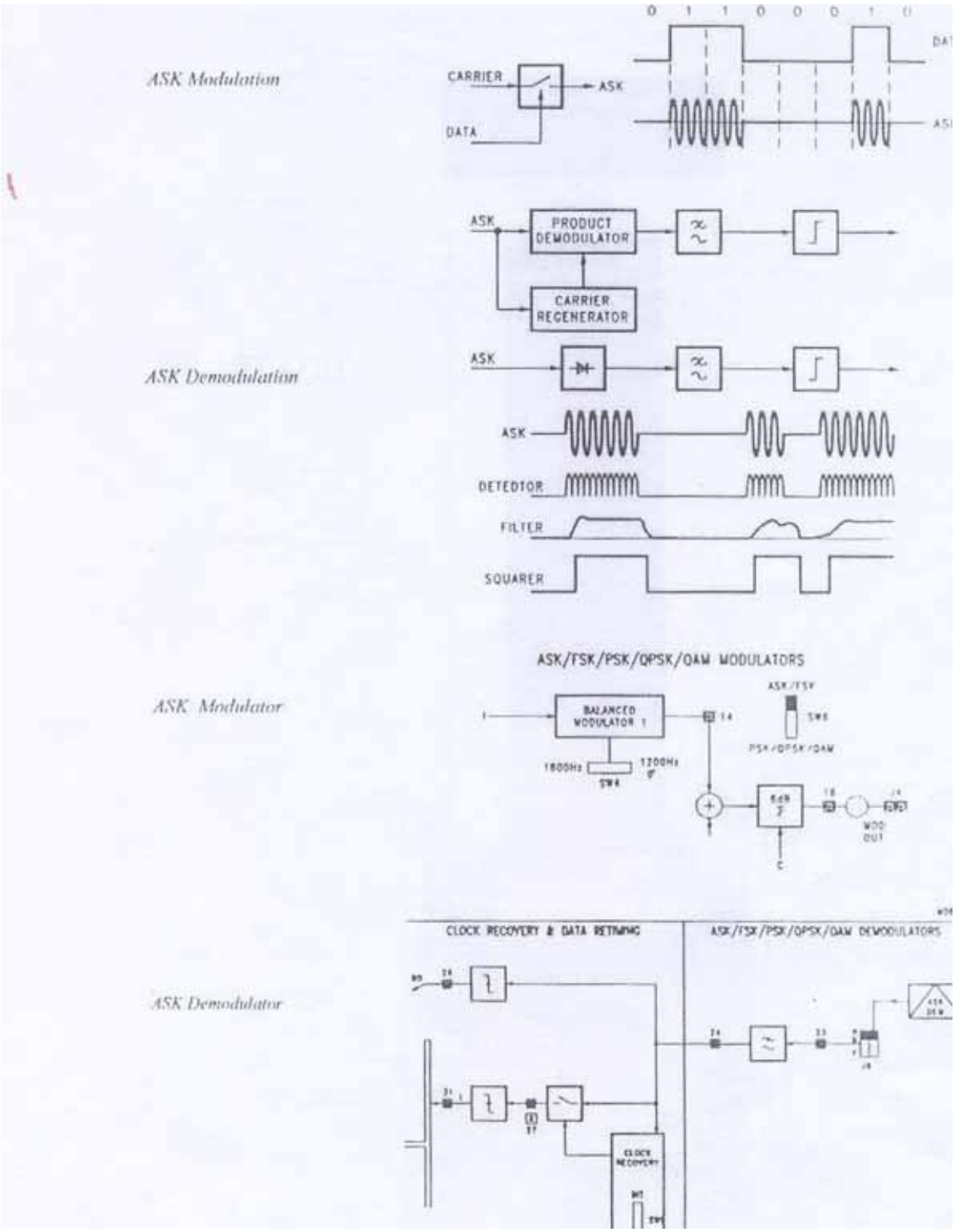

Figure 2

- Connect the oscilloscope to TP6 and TP16 so to display the data signal and ASK signal wave form. See Figure 2.
- Adjust the phase of the carrier to make the zero of sine wave correspond to the starting of the bit intervals.

De-modulation

- Keep the last condition (J1c-J3d-J4-J5-J6a; SW2=normal, SW3=24 bit SW4=1200, SW6=ASK, SW8=BIT and ATT=min, NOISE=min
- Set an alternate data sequence 00/11 and push START
- Connect the oscilloscope to TP16 and TP20 to examine the ASK signal before and after the communication channel. Note the readings at TP23, TP24, TP29
- Note the effect of the communication channel on the ASK signal.

Bit Error Rate

- Set the jumpers as follows: J1d-J3d-J4-J5-J6a.
- Set Switches as per the following SW2=Normal, SW3=64 bit, SW4=1200Hz, SW6=ASK, SW8=BIT, **SW9=STOP.**
- Set NOISE at 50 % of maximum value. Set SW9=READ and Push RESET (to initialize counter to zero). Let the counter progress for 60 seconds after which set SW9=STOP and note counter reading.
- Repeat steps and note error reading for NOISE at 100 %.
- The received bits are 18000 per minute. (300 bits/s times 60 seconds).

OBSERVATION:-

TP 6_____

TP 16_____

TP 20_____

TP 23_____

TP 24_____

TP 29_____

RESULT:-

- Effect of Attenuation

- Effect of Noise

- Bit Error Rate readings

    - At 50 % of maximum Noise

    - At 100 % Noise

LAB SESSION 02

OBJECT:-

- To observe Frequency Shift Keying (FSK) modulation and demodulation.
- To examine the effect of noise and attenuation on FSK systems.

EQUIPMENT REQUIRED:-

- Power unit PSU
- Module holder base
- Experiment module MCM3 1
- Oscilloscope

THEORY:-

Frequency shift keying -FSK
In this modulation the sine carrier takes 2 frequency values, determined by the binary data signal. The modulator can be carried out in different ways among the most used we can mention.

- A voltage controlled oscillator (VCO)
- A system transmitting one of the 2 frequencies as function of the data signal.
- A frequency divider controlled by the data signal.

The most used demodulation techniques are the one using a PLL circuit. The FSK signal across the PLL input takes two frequency values. The error voltages supplied by the phase comparator follows such variations, and so, it constitutes the NRZ binary representation (high and low level) of the FSK input signal. The PLL demodulator is followed by a low pass filter, which removes the residual carrier components and a squarer circuit which forms the proper data signal.

Bit Error rate- B.E.R
The B.E.R is the ratio of the error bits to the total received bits. Practically it tells the user how accurate the received data is.

BER = (No. of error Bits) / (Total No of received bits)

PROCEDURE:-

Modulation

- Power the module
- Set the circuit in FSK mode, with 24-bit data source and with out data coding (connect J1c-J3a-J5-J6b; set SW2=normal, SW3=24bit, SW4=1 800, SW5=1200/0°, SW6=FSK, SW8=BIT , ATT=min, NOISE=min)
- Set an alternate data sequence 00/11 and push START

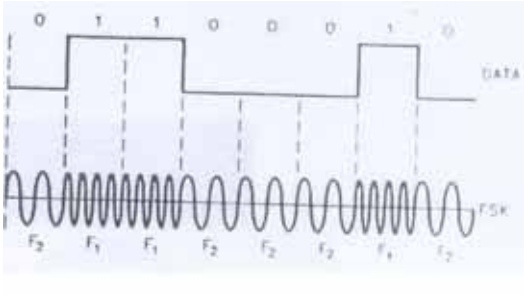

FSK Modulation

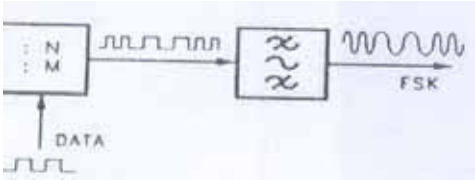

FSK Modulation

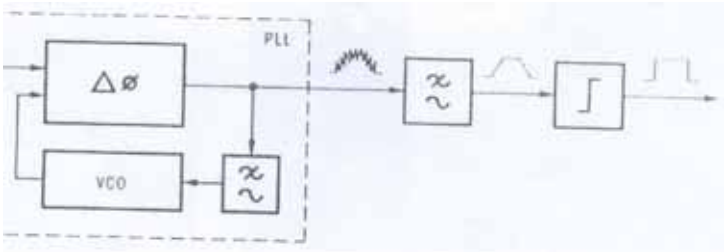

FSK Demodulation

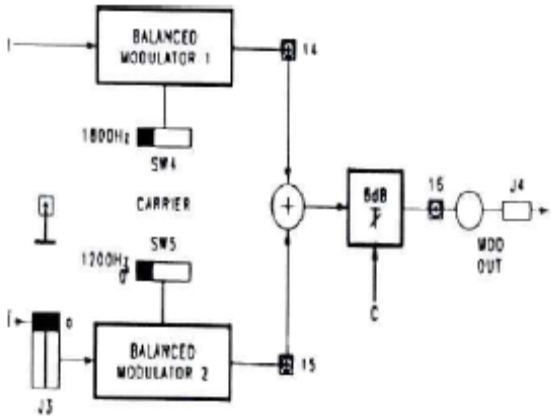

FSK modulator

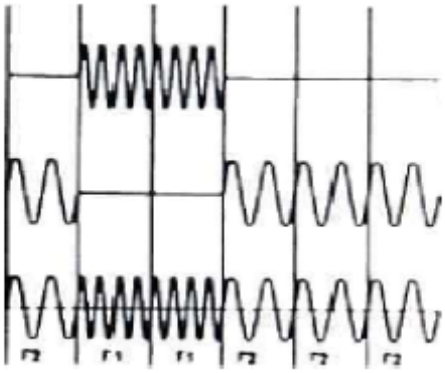

FSK modulator

- Connect the oscilloscope to TP6, TP 14, TP 15, TP16 and examine the data signal and FSK signal, adjust the phase (PHASE) of the 1200-Hz carrier to get continuity of FSK signal in the passage between the two frequencies (this kind of modulation is known as minimum frequency shift keying)

Demodulation

- Keep the last condition (J1c –J3a-J4-J5-J6b; SW2=Normal ,SW3= 24bit, SW4=1 800, SW=5=1200/0^0 , SW6=FSK, SW8=BIT , ATT=Min, NOISE =Min
- Set a alternated data sequence 00/11 and push START
- Connect the oscilloscope to TP16 and TP20, to examine the FSK signal before and after the communication channel. Connect oscilloscope to TP23, TP24 and TP29. Note down observations.
- Increase noise & note result then increase attenuation and note result.

Bit Error Rate

- Set the jumpers as follows: J1d-J3d-J4-J5-J6a.
- Set Switches as per the following SW2=Normal, SW3=64 bit, SW4=1200Hz, SW6=ASK, SW8=BIT, SW9=STOP**.**
- Set NOISE at 50 % of maximum value. Set SW9=READ and Push RESET (to initialize counter to zero). Let the counter progress for 60 seconds after which set SW9=STOP and note counter reading.
- Repeat steps and note error reading for NOISE at 100 %.
- The received bits are 18000 per minute. (300 bits/s times 60 seconds).

OBSERVATION:-

TP 6_____

TP 16_____

TP 20_____

TP 23_____

TP 24_____

TP 25_____

RESULT:-

- Effect of Attenuation

- Effect of Noise

- Bit Error Rate readings
    - At 50 % of maximum Noise

    - At 100 % Noise

LAB SESSION 03

OBJECT:-

- To observe the 2 PSK (Phase Shift Keying) modulation and demodulation.

EQUIPMENT REQUIRED:-

- Power unit PSU or PS1
- Module holder base
- Experiment module MCM 31
- Oscilloscope

THEORY:-

Phase shift keying -PSK

In this kind of modulation the sine carrier takes 2 or more phase values, directly determined by the binary data signal (2-phase modulation) or by the combination of certain number of bits of the same data signal (n-phase modulation) 2 phase PSK modulation is also called 2 PSK or binary PSK (BPSK) or phase reversal keying (PRK). The sine carrier takes 2 Phase valued determined by the binary data signal, modulation techniques is the one using a balanced modulator is the direct or inverted input carrier as function of the data signal. The main aspects characterizing the 2 PSK are:

- Use of digital data radio transmission.
- It required circuit of average high complexity
- High possibility of error but lower than the FSK
- If Fb is the bit transmission speed, the minimum spectrum Bw of the modulated signal is higher than Fb.
- The transmission efficiency defined as the Fb and Bw is lower than 1
- The Baud or Baud rate, defined as the modulation speed or symbol speed, is equal to the transmission speed Fb

2PSK Modulator

The sine carrier (1200 Hz) is applied to an input of the balanced modulator 1;a data signal (indicated with I) is applied to the other input. The circuit operates as balanced modulator, and multiplies the two signal applied to the inputs.
Across the output, the sine carrier is direct when the data signal is to low level (bit"0"), inverted (shift 180°) when the bit is "1" The 2-PSK signal then enters the adder used for FSK/QPSK/QAM modulation and exits via separator stage.
The 6db attenuator makes the signal amplitude half, and is activated only by QAM to block the operation of the balanced modulator 2 is 2-PSK mode the data input of the modulator 2 must be set to J3=b

2PSK Demodulator

The demodulator is carried out via a product demodulator which is reached by the PSK signal and locally regenerated carrier. This must have the same frequency and the phase of the one used in transmission (it must be coherent with the received signal),and is taken from the PSK signal

PROCEDURE:-

- Power on module
- Set the circuit in PSK mode, to get wave form of the PSK modulator and demodulator, with 24-bit data source and with out data coding (connect J1c-J3b-J4-J5-J6c; set SW2=normal, SW3=24_bit, SW4= 1800, SW5=1200/0°, SW6=PSK, SW8=BIT, ATT=min, NOISE=min) as in fig.
- Set an alternate data sequence 00/11 and push START
- Connect the oscilloscope to TP6 and TP16, and examine the data signal and PSK signal. Adjust the phase (PHASE) to invert the phase of carrier in correspondence to 0.
- Connect the oscilloscope to TP24 and TP29. to examine the PSK signal before and after the communication channel.
- Observe the effect of the communication channel one PSK signal. As the communication channel is limited band, the phase transition of the output PSK signal is slightly beveled.

OBSERVATION:-

TP 6_____

TP 12_____

TP 16_____

TP 20_____

TP 24_____

TP 31_____

RESULT:-

- Effect of Attenuation

- Effect of Noise

LAB SESSION 04

OBJECT:-

To plot the characteristic modulation curve of FM Modulator & calculate Sensitivity
And Non linearity

EQUIPMENT:-

- Modules T10A-T10B
- +/- 12-V dc power supply
- Oscilloscope
- Frequency meter
- Voltmeter.

THEORY:-

Frequency modulation generation
The circuits used to generate a frequency modulation must vary the frequency of a high frequency signal (carrier) as function of the amplitude of a low frequency signal (modulating signal).In practice there are two main methods used to generate the FM:

- Direct method: an oscilloscope is used in which the reactance of one of the elements of the resonant circuit depends on the modulating voltage. The most common device with variable reactance is the Varactor or Varicap, which is a particular diode which reactance is the Varactor or Varicap, which is a particular which capacity varies as of the reverse bias voltage (the varicap is described in the next chapter). The frequency of the carrier is established with AFC circuits (Automatic Frequency Control) or PLL (Phase Locked Loop)
- Indirect method: the FM is obtained in this case by a Phase Modulation, after the modulating signal has been integrated. In the phase modulator the carrier can be generated by a quartz oscillator, and so its frequency stabilization is easier.

In the circuit used for the exercises, the frequency modulation is generated by a Hartley oscillator, which frequency is determined by a fixed inductance and by the capacity (variable) supplied by Varicap diodes.

Characteristic modulation curve. Sensitivity and Non linearity
The Characteristic modulation curve is given by the output *frequency* of the modulator as function of the input modulating voltage. It is possible to statistically simulate an amplitude variation of the modulating signal, by using a potentiometer and measuring the corresponding output frequency of the modulator.

PROCEDURE:-

1. Power the module T10A with +/-12V and carry out the following presetting:
   VCO1: LEVEL about 2VPP: FREQ. to the minimum;
   switch on 1500 kHz
2. Connect the oscilloscope and frequency meter to the output of the modulator (RF/FM OUT, point 19)
3. Connect the voltmeter to the cursor of the frequency regulation potentiometer (Point 17)
4. Vary the Voltage at steps of 0.5 Volt and fill a table with the voltage values and the corresponding frequencies
5. Plot a graph with the measured voltage and frequency values. You will obtain a curve.
6. From the analysis of the curve you can note the some segments have not a linear behavior, while if you consider the whole characteristic you find a high non-linearity.
7. Consider the make the modulator operate in the segment of curve within 700 and 1300 kHz, with central frequency of 1000 kHz. By analysis of the curve it is possible to calculate the *modulation sensitivity* and the *non-linearity* of the *modulation sensitivity* and the *non-linearity* of the modulator.
8. *The modulation sensitivity S* is defined as:

$$S = dF(v) / dV$$

Where *F* (v) is the instantaneous frequency function of the modulating voltage the last relation can be approximated writing the incremental ratio:

$$S = \Delta F / \Delta V$$

The *non-linearity N.L.* of the modulator is defined ad percentage relative shift of the sensibility S from the so value corresponding to the central frequency:

$$N.L = [(S- S_O) / S_O] \times 100$$

Considering for example the point around 1300 kHz, the calculation is carried out as follows:

F'= 50 kHz, V' = 175 mV

From which:

S' = 50/175 = 0.29 kHz/mV

$$N.L = \frac{0.4-0.29}{0.4} .100=27.5\%$$

RESULT:-

LAB SESSION 05

OBJECTIVE:-

To observe the characteristics of a Frequency Modulated wave in Time domain and Frequency Domain.

EQUIPMENT:-

Feedback-Teknikit Console 92-300.
Pentium 4 or equivalent computer available in lab.

THEORY:-

Frequency Modulation Generation:
The circuits used to generate a frequency modulation must vary the frequency of a high frequency carrier signal as a function of the amplitude of low frequency signal (modulation signal). In practice there are two main methods used to generate FM:

- Direct method: a tank circuit is used in which the reactance of one of the elements of the resonant circuit depends on the modulating voltage. The most common device with variable reactance is the Varactor or Varicap. This is a particular diode and its capacitance varies according to the reverse bias voltage applied across it. The frequency of the carrier is established with Automatic Frequency Control (AFC) circuits or Phase Lock Loop (PLL).
- Indirect method: The FM is obtained in this case by a Phase modulation, after the modulating signal has been integrated. In the phase modulator the carrier can be generated by a quartz oscillator, and so its frequency stabilization is easier.

PROCEDURE:-

Begin by powering up the PC and trainer board. After that click on the Discovery II IMS window and scroll to the required practical as shown in *figure 1*.
Click on the green icon named 'Practical' (its folder titled 'Practical 1: Concepts of Frequency Modulation' -see above). Accept the pop up that appears after clicking on the 'Practical' link to start the in built oscilloscope interface.

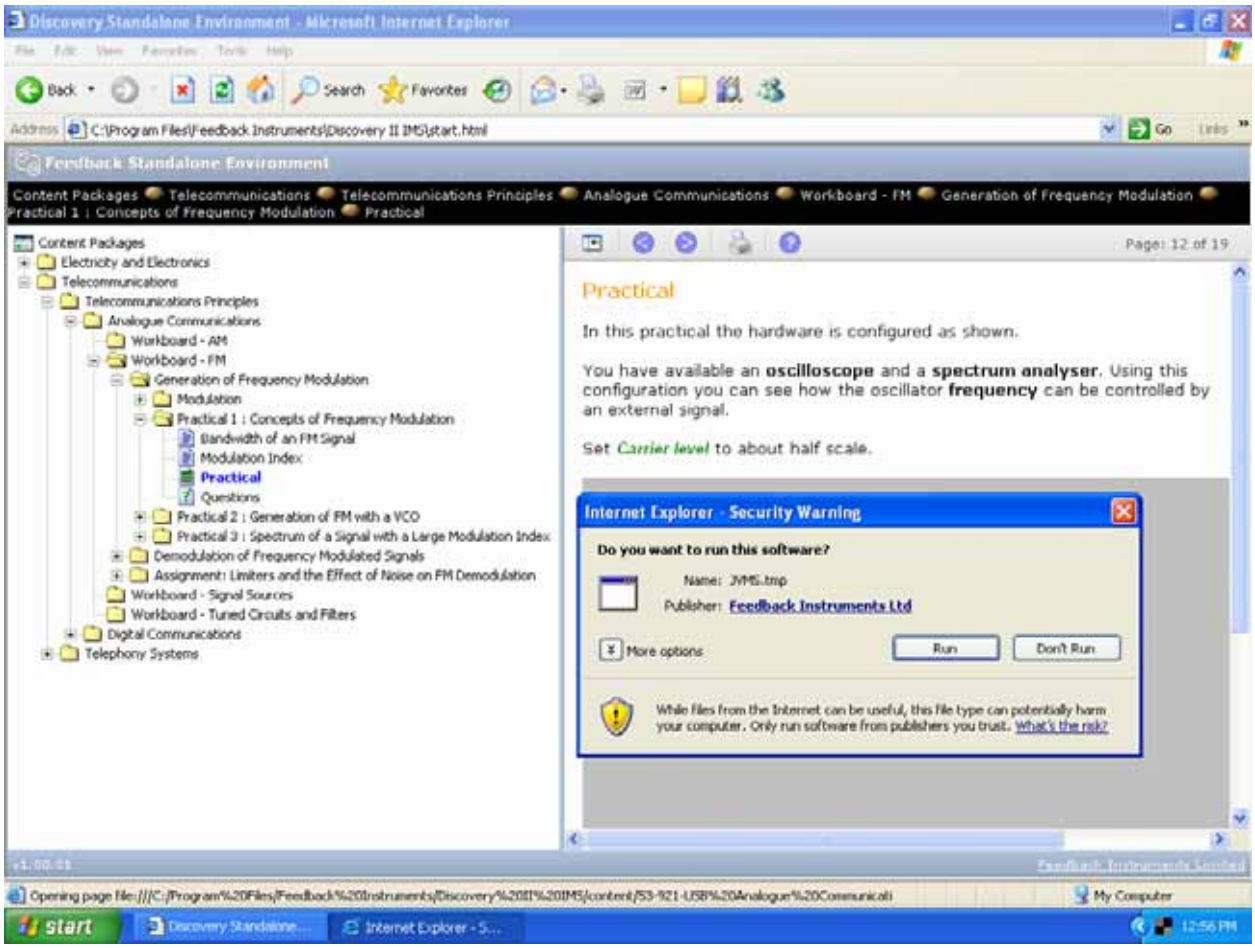

Figure 1

You have available an **oscilloscope** and a **spectrum analyzer**. Using this configuration you can see how the oscillator **frequency** can be controlled by an external signal.

Set *Carrier level* to about half scale (0.8 Vp-p). Monitor point **16** shows us the DC input voltage and monitor point **4** shows the output carrier which is frequency modulated.
Figure 2 shows the output signal when input voltage is 0 V. you can measure the frequency in the time domain using the oscilloscope and also in the frequency domain using the spectrum analyzer.

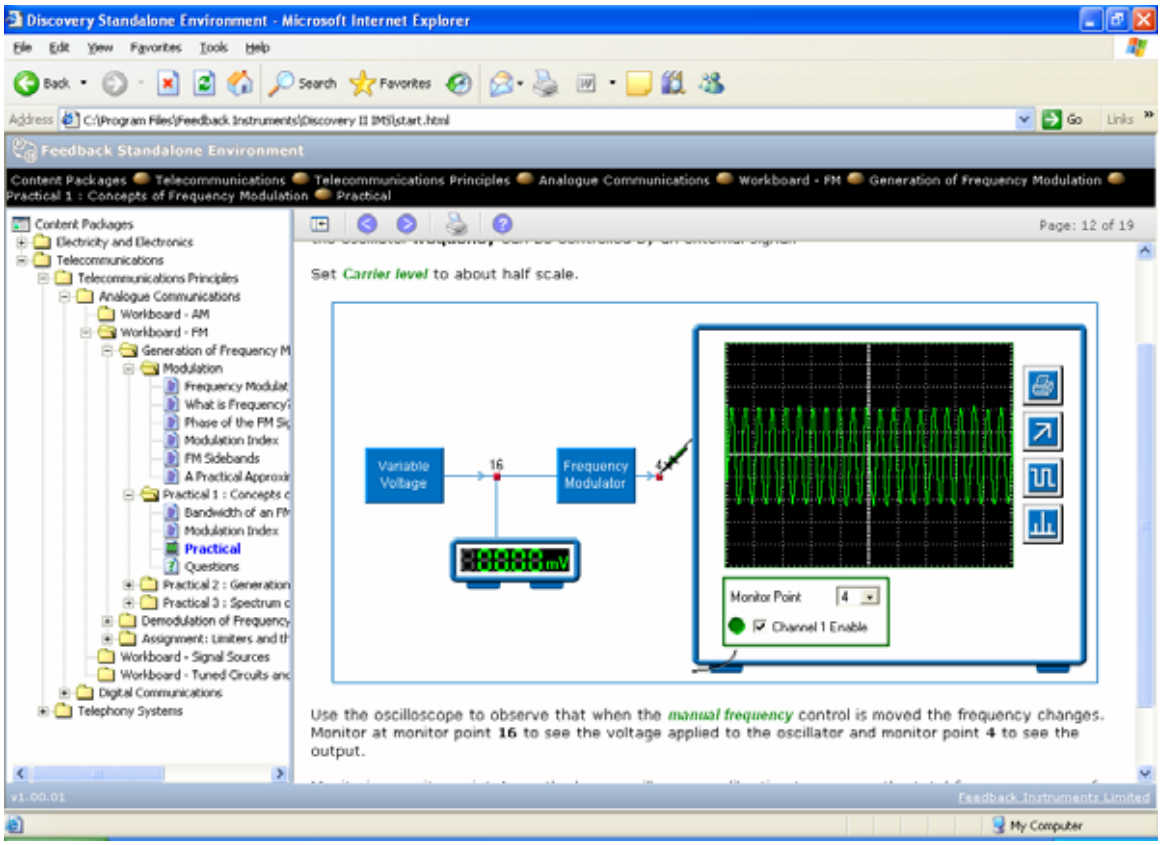

Figure 2

The Frequency corresponding to a zero input voltage is best observed by the spectrum analyzer as shown in *figure 3*. The left marker of the spectrum analyzer is utilized to measure the signal frequency.

A tedious way to measure the output signal frequency is by observing the signal in time domain. We take the inverse of the pulse time duration which is measured with the help of the left and right scope markers-*Figure 4*. Note, that the spectrum analyzer method is a bit more accurate.

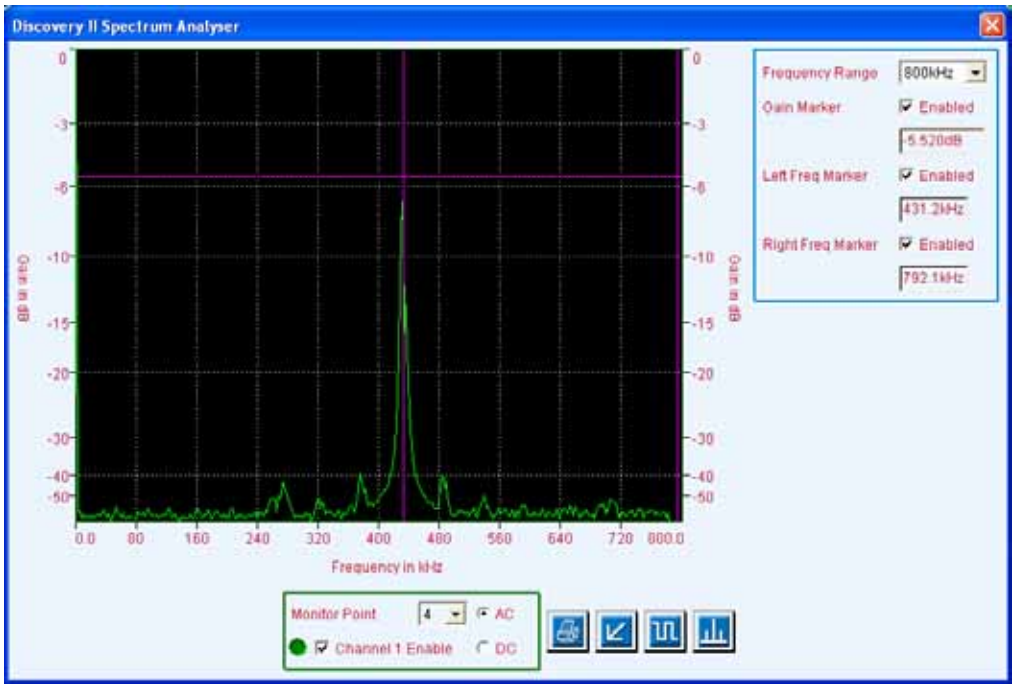

Figure 3: Spectrum analyzer output

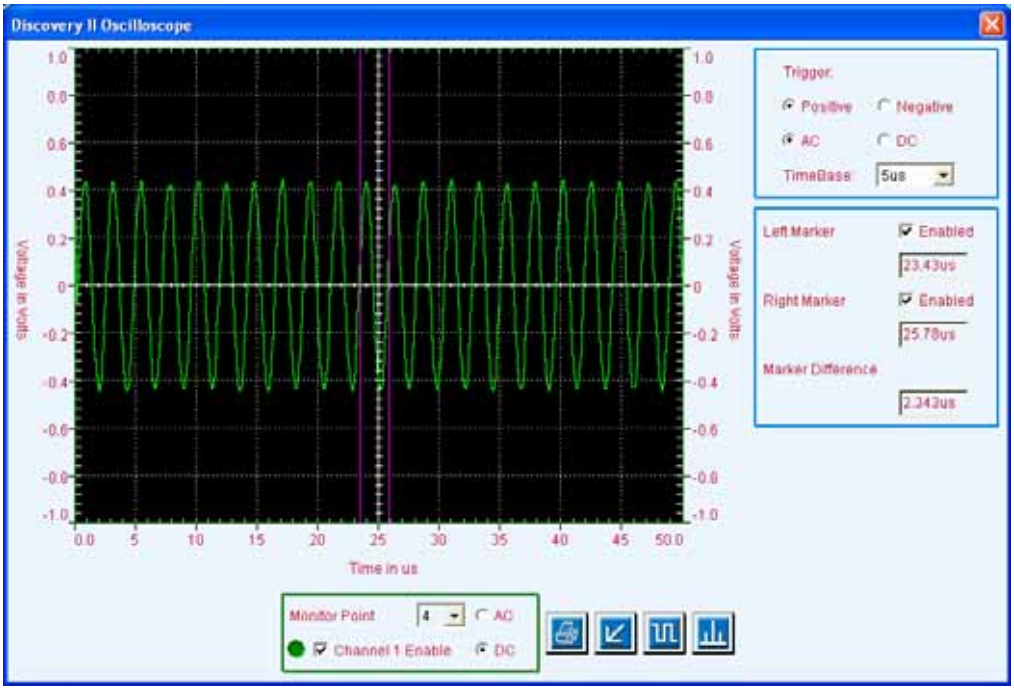

Figure 4: Oscilloscope output

OBSERVATION:-

Set the carrier amplitude such that it is 2 divisions above and below the x-axis (approximately 0.8 Vp-p). Fill in the table below for DC input voltage vs. output carrier frequency. Plot a graph using the values you recorded in the table.

Input Voltage (V)	Output Frequency (Oscilloscope) Hz	Output Frequency (Spectrum Analyzer) Hz

RESULT:-

What conclusion can you deduce from this exercise?

LAB SESSION 06

OBJECT:-

To observe FM modulation using Sine wave, Square wave and Triangular wave.

EQUIPMENT:-

Modules T10A-T10B
+/- 12-V dc power supply
Oscilloscope
Voltmeter.

THEORY:-

Frequency Modulation is a system in which the amplitude of the modulated carrier is kept constant, while its frequency is varied by the modulating signal. Unlike Amplitude Modulation, FM is, or can be made, relatively immune to noise. The effect of noise depends on the noise sideband frequency. Processes of pre-emphasis and de-emphasis plays an important part in making FM immune to noise.
The first practical FM system was put forward in 1936 as an alternative to AM to make radio transmissions more resistant to noise.
A comparison of FM and AM reveals:

- The amplitude of an exponential modulated wave is constant.
- The message resides in the zero-crossings alone, provided the carrier frequency is large.
- The modulated wave is not at all like the message waveform.

OBSERVATION:-

It has been observed that as the voltage level of baseband signal increases the frequency of the signal after modulation also increases for all types of signals as shown.

Sine Wave
As voltage of sine wave increases the frequency increases as well.

Square Wave

At high level the frequency increases and at the low level the frequency of FM decreases.

Triangular Wave

As voltage increases the frequency of carrier increases and as voltage decreases the frequency of carrier decreases.

RESULT:-

LAB SESSION 07

OBJECT:-

To observe the normal operation of pulse amplitude modulator and demodulator.

EQUIPMENT REQUIRED:-

PAM Modulator module 736061
PAM demodulator module 736071
Function generator module 72695
Power supply module 72686
Frequency counter module 72699
Oscilloscope
Bridging plugs & cable pairs

THEORY:-

It is a modulation technique in which analog signal is sampled and sampled values arte used to modify certain parameters of a periodic pulse train to convert information into a form for transferring pulses from a source to a destination. There are two categories of pulse modulation:

- Digital pulse modulation
- Analog pulse modulation

PAM is analog pulse modulation in which amplitude of a constant width and constant position pulse train is varied according to the amplitude of the analog signal. This process is termed as sampling of the analog signal. PAM signal is time discrete and value continuous. PAM signal is neither digital nor analog and it is not suitable for transmission. We are dealing with bipolar PAM as both positive and negative value arises. To avoid aliasing sampling theorem must be followed. PAM is used as an intermediate stage of the Pulse Code modulation PCM.

PROCEDURE:-

- Set up the experiment as specified in the *Figure 1*.
- Set the pulse generator to t/Tp = max and Fp = 15 kHz fed into the input filter CH1 a sinusoidal signal with Fm = 500 Hz.
- Observe the output of the filter by using oscilloscope with Vpp unchanged and change Fm.
- Measure the amplitude of the output off the low pass filter CH1 and calculate the gain of the low pass filter from Am and Ao.
- Connect CH2 of the oscilloscope at the output of the demodulator, repeat the experiment at different t/Tp with the pulse frequency Fp unchanged observe the effect on the output signal at CH1.
- Set the pulse duty factor t/Tp to max and lower the sampling frequency and take readings at different Fp values, observe the effect on the output signal of the demodulator at CH1 using oscilloscope.

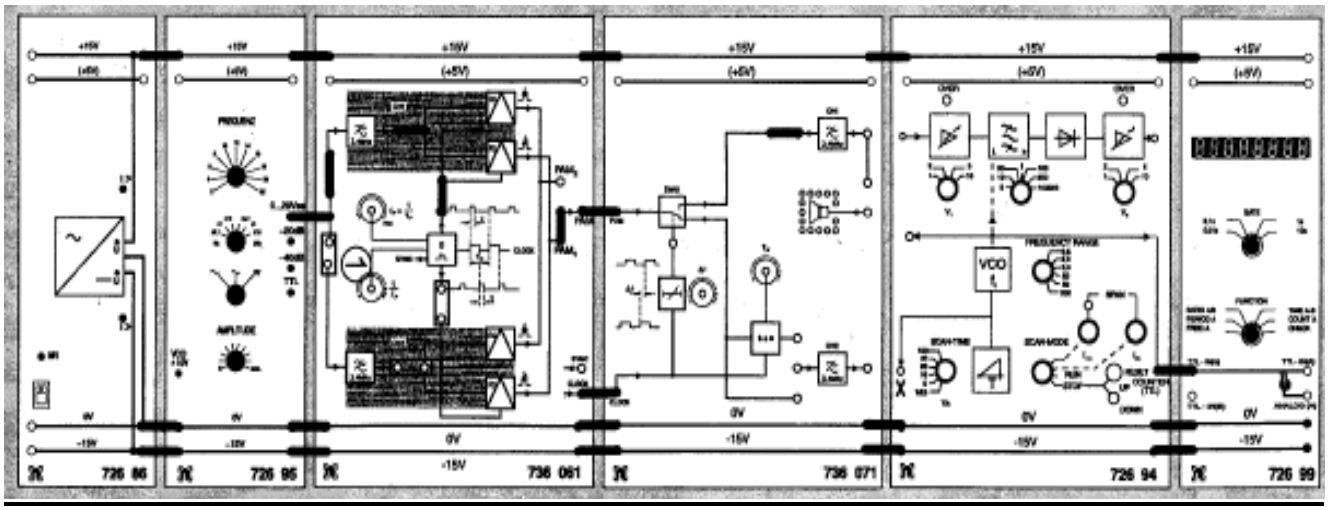

Figure 1

OBSERVATIONS:-

- **Filter response**

  Input is a 7 Vpp sinusoidal wave with varying frequency.

Input Signal		output Signal	
Vpp (V)	F (kHz)	Vpp (V)	F (kHz)
7	1		
7	2		
7	3		
7	4		
7	5		
7	6		
7	8		

- **Effect of Pulse duty factor on PAM signal**

  Input is a 7 Vpp sinusoidal wave fixed frequency of 1 kHz.

Pulse Duty factor	Pulse Frequency	Input Signal		Output Signal	
t/Tp	Fp (kHz)	Vpp (V)	Fi (kHz)	Vpp (V)	Fo (kHz)
50%		7	1		
40%		7	1		
30%		7	1		
20%		7	1		
10%		7	1		

- **Effect of sampling frequency (Fp) on PAM signal**

  Input is a 7 Vpp sinusoidal with fixed frequency of 1 kHz.

Pulse Duty factor	Pulse Frequency	Input Signal		Output Signal	
t/Tp	Fp (kHz)	Vpp (V)	Fi (kHz)	Vpp (V)	Fo (kHz)
50%		7	1		
50%		7	1		
50%		7	1		
50%		7	1		
50%		7	1		

CONLCLUSION:-

Give a brief analysis of:

- The effect of Pulse duty factor on the PAM signal:-

- The effect of the sampling frequency on the PAM signal:-

LAB SESSION 08

OBJECT:-

To observe the normal operation of a 2-Channel PAM time-division multiplex system (PAM-TDM) system.

EQUIPMENT REQUIRED:-

1 PAM modulator module 736061
1 PAM modulator module 736071
2 Function generator module 72695
1 Power supply module 72686
1 Frequency counter module 72699
1 Digital storage oscilloscope
1 Multi meter
Bridging plugs
Cable pairs

THEORY:-

Multiplexing
Multiplexing is the process of simultaneously transmitting more than one individual signals over a single communication link. Multiplexing has the effect of increasing the number of communication channels so that more information can be transmitted. There are two basic types of multiplexing
1-FDM (Frequency division multiplexing)
2- TDM (Time division multiplexing)

In TDM each signal can occupy the entire bandwidth of the channel however each channel is transmitted for a brief period of time.

PROCEDURE:-

1. Feed in a triangular signal with fm 1 = 200Hz and Am1 = 2V in channel 1 (CH1).
2. Feed in a sinusoidal signal with fm 2 = 300Hz and Am2 = 3V into channel 2 (CH2).
3. Set the sampling frequency to maximum fp = 20 KHz.
4. Set the Pulse duty factor to maximum t/Tp = 48%
5. Display the input signals simultaneously on the oscilloscope and sketch it.
6. Display the PAM-TDM signal and sketch it.
7. Display the respective input and out put signal of the demodulator low pass filter of CH1 and CH2.
8. Display the CLOCK signal and the demux trigger signal on the oscilloscope and set delta t so that the trigger signal is delayed by 90 degree w.r.t. the CLOCK signal.
9. Display the respective input and output signal of the demodulator low pass filter of CH1 and CH2.
10. Adjust delta t with 180 degree phase difference you will observe that the demodulator signals from CH1 and CH2 are interchanged completely.
11. Display the respective input and output signal of the demodulator low pass filter of CH1 and CH2.

12. Now vary the pulse-duty factor from min to max and see the effect at the output signals of the CH1 and CH2 low pass filter. Alternate from PAM1 to PAM2 by changing the bridging plug the PAM modulator.

OBSERVATION AND RESULT:-

LAB SESSION 09

OBJECT:-

By use of slotted line:

- To determine the unknown frequency.
- To determine the Voltage Standing Wave Ratio (VSWR) and Reflection Coefficient.

APPARATUS:-

Transmitter mod MW-TX
One slotted line MW-5.
Loads of different values (Open Circuit, Short Circuit, 75 Ω, 50 Ω, 100 Ω).
RF cable (Z_0=75Ω).
Voltmeter

THEORY:-

When power is applied to the transmission line, voltage and current appear. If $Z_L = Z_0$ load absorbs all power and none is reflected. If $Z_L = Z_0$ then some power is absorbed and the rest is reflected. We have one set of voltage and current waves travelling towards load from the source and another reflected set travelling back to the source. These sets of travelling, in opposite directions set up an interference pattern called *Standing Waves*. Maxima (antinodes) and Minima (nodes) of voltage and current occur at fixed positions.

The slotted line isused to measurte voltage and current directly on the various sections of the coaxial line, as by the slot you can enter the electricla and magnetic fields between the two connectors constituting the coaxial line.

In the presence of standing waves, the voltage (or current) maximum and minimum value can be seen, the distance between the maximum and the adjacent minimum is equal to one fourth the wave length. The speed factor of the line is equal to 1 because the dielectric is air. Once the speed factor is known, by measuring the distance between two minima and multiplying it by two, it is possible to obtain the frequency of the signal applied to the slotted line.

The Standing Wave Ratio (SWR) is equal to the ratio of the maximum to the minimum value, in fact on the maximum, the direct and reflected wave value (of voltage and current) are added and on the minimum are subtracted. If the reflected wave does not exist, voltage and current keep constant along the line and their ratio is equal to the characteristic impedence Z_0 and the SWR is equal to 1. such a line is called a flat line.
The output power of the generator, tuned to the lowest frequencies (for example 701.5 MHz) must be regulated to the maximum, connect the output of the generator to the slotted line with a one meter long 75 Ω cable, connect 75 Ω to the other end of the slotted line. In this case the line is thus terminated with its characteristic impedence. If the machining is perfect then by moving the probes along the slotted line the signal amplitude will keep almost constant. There may however be variations caused by connectors or probe allignment.
Change the termination of 75 Ω to 50 Ω and measure the voltage along the line. It has the strongest minimum and maximum values than the last ones. Check if the distance between the minimum and maximum is equal to ¼ of the wave length. Now, take readings of the distance

between the minimum & maximum at various frequencies. You should note that this distance changes for increasing and decresing frequencies.

Repeat this exercise with the termination set to 100 Ω.

We can also distinguish if the load is greater or smaller than the characteristic impedence of the line, In fact with 100 Ω the voltage minimum is at ¼ wave length from the load while on the load there is a maximum. With 50 Ω the voltage minimum is on the load.

PROCEDURE:-

- Connect the generator (transmitter) to the slotted line through RF cable.
- Terminate the line by attaching a load (Z_L) on the other end of the line.
- Insert the probes of voltmeter in the slots provided on the trailer of the slotted line.
- Turn on the generator and excite the cable with RF waves.
- Move the trailer on the slotted line. Positions of the maximum and minimum voltage appear alternately on the slotted line.
- Note down the man & min values of voltege.
- Also note down the positions of the voltage minima and maxima on the scale.
- Determine VSWR by the following formula:

  $$\text{Measured VSWR} = V_{MAX} / V_{MIN}$$

- Determine the calculated VSWR by the formula:

  $$\text{VSWR} = [1 + \Gamma] / [1 - \Gamma] \qquad \text{where, } \Gamma = [Z_L - Z_0] / [Z_L + Z_0]$$

- Calculate the unknown frequency with the help of the following formula:

  $$F = c / \lambda$$

  Where, $\lambda / 2$ = measured distance between two consecutive voltage maxima (or two consecutive voltage minima).

- Repeat same procedure for different loads (Z_L).

OBSERVATIONS:-

Z_L	V_{MAX}	V_{MIN}	VSWR (measured)	VSWR (calculated)
Open Ckt.				
Short Ckt.				
50 Ω				
75 Ω				
100 Ω				

RESULT:-

LAB SESSION 10

OBJECT:-

By use of slotted waveguide

- To observe how the load impedance affects the VSWR.
- To determine when a waveguide is properly terminated

EQUIPMENT:-

1 Transmitter Module MW-TX.
1 Up Converter unit module MW-UC.
1 VSWR/LEVEL meter unit module MW-MT.
1 Waveguide module MW-3.
2 WG/Coax Adapter Module MW-1.
1 Fixed attenuator module MW-8.
1 20db Co-axial attenuator module MW-23.
1 slotted line module MW-5.
1 Detector module MW-4.
1 Short circuit module MW-10.
2 Low support module MW-21.
2 SMA-SMA coaxial cables.
1 BNC-BNC coaxial cable.
1 cable with 2 mm plug.

THEORY:-

Consider a transmitter line with characteristic impedance $\mathbf{Z}_o$ connected to a load impedance $\mathbf{Z}_l$. If $\mathbf{Z}_l$ is different from $\mathbf{Z_o}$ there is a mismatch between load and line. In this case, not all the power reaches the line end in the load, but part of it returns to the same line (and so to the generator). Along the line Standing Wave are created, resulting from the sum of the incident wave traveling along the line to the load and the reflected wave coming back and moving away from the load. Along the line there are **loops (**maximum) and **nodes** (minimum) of voltage and current in fixed positions: the maximum and minimum are separated by $\lambda / 2$ and a maximum of voltage corresponds to a minimum of current and vice versa.

Co-Efficient of Reflection
It can be given by the following relation ship

$$\Gamma = \frac{Z_L - Z_o}{Z_L + Z_o}$$

Standing Wave Ratio
We define as VSWR (voltage standing wave ratio) as the ratio between the maximum value and the minimum value of standing wave:

$$\mathbf{VSWR} = \frac{V_{\max}}{V_{\min}}$$

Power Standing Wave Ratio
The ratio between and VSWR is the following

$$\mathbf{VSWR} = \frac{1+|\Gamma|}{1-|\Gamma|}$$

Power Standing Wave Ratio
Power standing wave ratio:

$$\mathbf{SWR = VSWR}^{2}$$

Line with Load
In case of perfect matching between the line and load ($\mathbf{Z_o = Z_L}$) we have $\Gamma = 0$ and **VSWR** = 1. Acceptable **VSWR** values are included between 1.1 and 2. *Figure 1* shows example of standing wave ratio for different load impedances note that

- When ZL = Infinity (open circuit); on the load there is maximum voltage and null current
- When ZL = 0 (short circuit); on the load there is null voltage and maximum current.

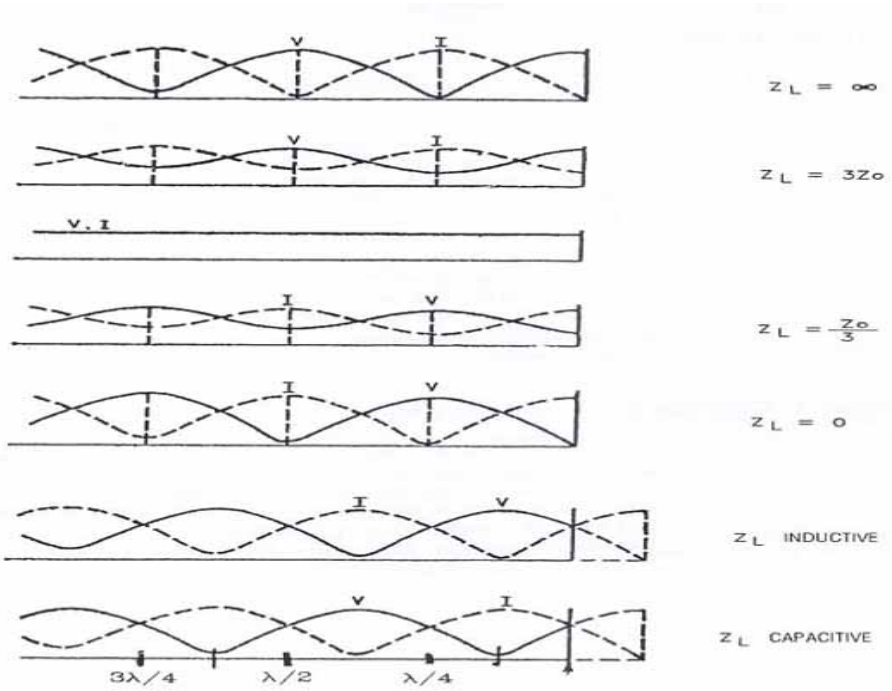

Figure 1

PROCEDURE:-

1. Carry out wiring between the unit as indicated in *Figure 2*.
   (note that the final transition with the coaxial attenuator module MW-23 represent the unknown load that is to be measured).
2. Take care to the connection between the transmitter unit and the input of the UP-converter unit (side in which there are the led and the power supply input!)
   SW1=1
   SW2=1
   SW3= Direct
   LEVEL= -25

3. Set the meter unit in the following operating mode:
   SW1 = 100 mV
   SW2 = ON
4. Power the two units the start up switch set on the rear side
5. Move the trailer of the slotted guide to the unknown impedance (adapter plus attenuator).
6. Note that the values expressed during the exercise could be different as the impedance is not ideal
7. Move the trailer and note the position of the first minimum **(D** m1= **D** L)
8. Move the trailer and note the position of the first maximum (**D**M1) and calibrate the instrument to the maximum indication.
9. Move the trailer and note the position of the second minimum **D**m2 and measure the VSWR on the instrument.
10. If λ_g**/2** is equal to the distance between the two minimum values, calculate λ**g** that will be equal to about 4 cm.
11. Change the adapter and coaxial attenuator with the short circuit.
12. Move the trailer and find the new first minimum value, next to the last (**D**s)
13. Check again the measurement of $\lambda_g/2$.
15. Repeat for different types of load (Z_L).

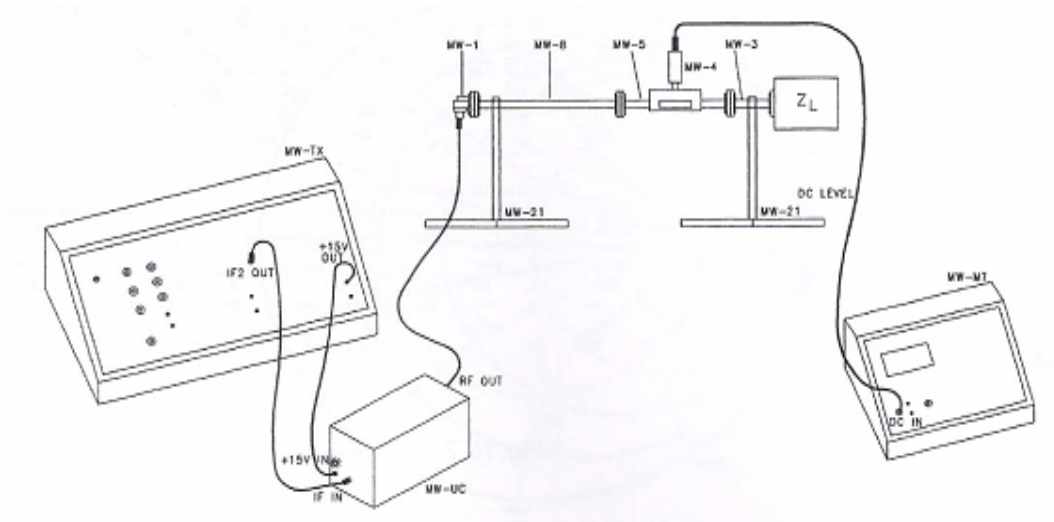

Figure 2

OBSERVATIONS & CALCULATIONS:-

Dimensions of the waveguide a=_____cm; b=_____cm
Mode of propagation = TE_{10}
Frequency of operation = 10.7GHz
Wavelength in free space λ_o =2.8cm
Cutoff Frequency of waveguide = 7.870GHz.
Cutoff Wavelength λ_c = 2a = 3.81cm

Terminations	Dm1	Dm2	λ_g =2(Dm2-Dml)	Vmax	Vmin	VSWR
Open Circuit						
Short Circuit						
Horn Antenna (MW-16)						
Matched Load						

RESULT:-

LAB SESSION 11

OBJECT:-

To measure unknown load impedance attached to a waveguide using the smith chart.

EQUIPMENT:-

1 Transmitter unit module MW-TX
1 Up converter unit module MW-UC
1 VSWR/LEVEL meter unit module MW-MT
1 wave guide module MW-3
2 WG/Coax Adapter module MW-1
1 Fixed attenuator module MW-8
1 20dB Co-axial attenuator module MW-23
1 slotted line module MW-5
1 Detector module MW-4
1 short circuit module MW-10
2 low support mod MW -21
2 SMA-SMA coaxial cables
1 BNC-BNC coaxial cable
1 cable with 2mm-plug.
1 Smith Chart.

THEORY:-

The Smith chart was developed by P. H. Smith in 1939, since then it has been the most widely used graphical technique for analyzing and designing transmission line circuits. Even though the original intent of its inventor was to provide a useful graphical tool for performing calculations involving complex impedances, the Smith chat has become a principal presentation medium in computer aided design (CAD) software for displaying the performance of microwave circuits. The Smith chat can be used for both lossy and lossless transmission lines.

Impedances on the smith chart are represented by normalized values, with Z_o the characteristic impedance of the line, serving as the normalization constant. Note, that normalized impedances are denoted by lowercase letters.
For example a load impedance Z_L can be normalized as

$$z_L = Z_L / Z_o \quad \text{(Dimensionless)}$$

The reflection coefficient Γ can be written as

$$\Gamma = \frac{z_L - 1}{z_L + 1}$$

Inversely, the normalized load impedance can be written as

$$z_L = \frac{1 + \Gamma}{1 - \Gamma}$$

The smith chart is made up of circles of constant resistance and circular arcs of constant reactance (capacitive or inductive) as shown in *Figure 1*.

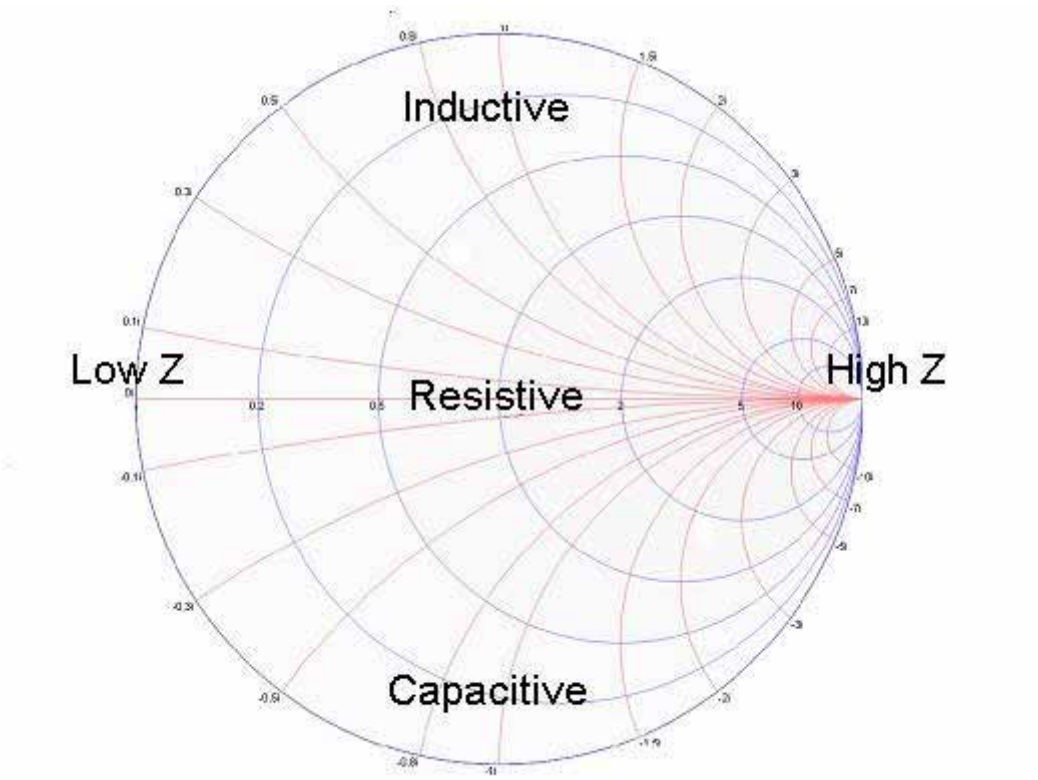

Figure 1

The construction of the smith chart is based on the two parametric equations given below:

$$\left(\Gamma_r - \frac{r_L}{1+r_L}\right)^2 + \Gamma_i^2 = \left(\frac{1}{1+r_L}\right)^2$$

$$(\Gamma_r - 1)^2 + \left(\Gamma_i - \frac{1}{x_L}\right)^2 = \left(\frac{1}{x_L}\right)^2$$

Here,
Γr = Real part of reflection coefficient.
Γi = Imaginary part of reflection coefficient.
r_L = Normalized load resistance
x_L = Normalized load reactance.

The perimeter of the Smith chart consists of three concentric scales which are the angle of reflection coefficient in degrees scale, wavelength towards Load and wavelength towards Generator scales.

Wavelength towards Generator (WTG) scale

The outermost scale around the perimeter of the smith chart called wavelength towards generator (WTG) scale, has been constructed to denote movement on the transmission line toward the generator. This scale is in units of wavelength λ, that is, Length is measured in terms of wavelength. One complete counter-clockwise rotation along the perimeter of the smith chart corresponds to a length of λ/2 along the transmission line (in the direction of load to generator/source).

Wavelength towards load (WTL) scale

For convenience this scale is included on the perimeter of the smith chart. One complete clock wise rotation along this scale denotes traveling from generator/source towards load on the transmission line by a distance of λ/2.

Standing Wave Ratio (SWR) circle

The center of the smith chart is the intersection point of Γr and Γi axes. Thus using a compass a circle can be drawn (with origin at the center) to represent all points where the 'Γ' is same. This circle is called the *constant- Γ circle* or more commonly the *SWR circle*.

$$SWR = \frac{1 + mag(\Gamma)}{1 - mag(\Gamma)}$$

The value of SWR is numerically equal to the point at which the SWR circle intersects the real Γ axis on the right hand side of the chart's center.

Calculation of Unknown Impedance with the Smith Chart

Consider an unknown impedance Z_L connected to a waveguide with characteristic impedance Zo. The procedure to calculate Z_L is the following:

Connect the Z_L at the end of the line with the use a slotted line, calculate **VSWR**

Determine the position DL as reference of a standing wave minimum

Remove Z_L and insert a short circuit

Measure the wave length in guide λ_g (measure the value λ_g /2 between two minimum or two maximum value of the standing wave) note the new position DS of the minimum.

On the smith chart, plot the circle corresponding to the VSWR calculated in the last point 2.

Calculate the variation of the two minimum values found before expressed in fractions of wave length (see *Figure 2* and *Figure 3*).

$$\mathbf{D\ min = (DL – Ds) / \lambda_g}$$

Move along the circumference of the smith chart with a quantity like the last value **D min** clock wise, if the minimum value found with the load is moved toward the generator in respect to the minimum value found with the short circuit, vice versa on the contrary case.

Plot straight line between the determined point and the center of the smith chart.

The normalized value **(Z_L/Z_o)** of the unknown impedance is read in the intersection point between the circle and the straight line:

$$\mathbf{Z_L/Z_o = r + jx}$$
$$\mathbf{Z_L = Z_o \cdot (r+jx)}$$

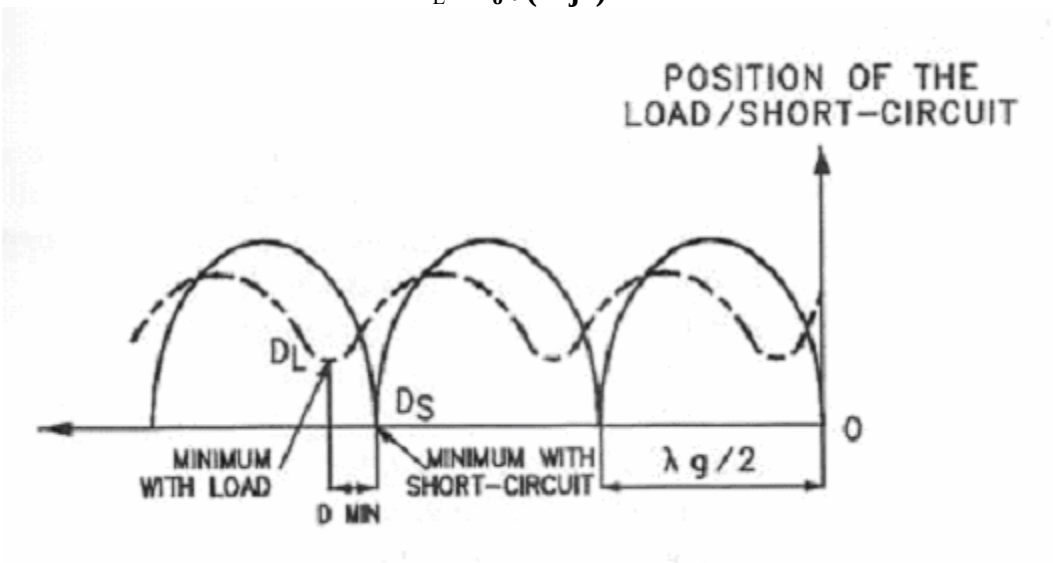

Figure 2

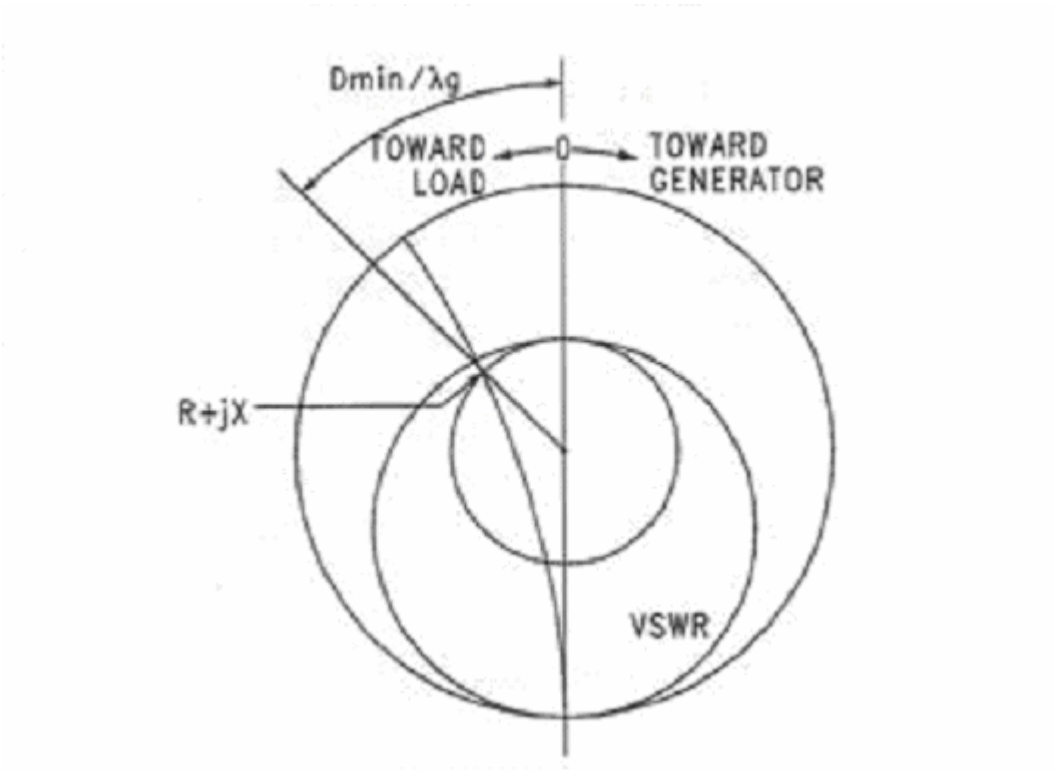

Figure 3

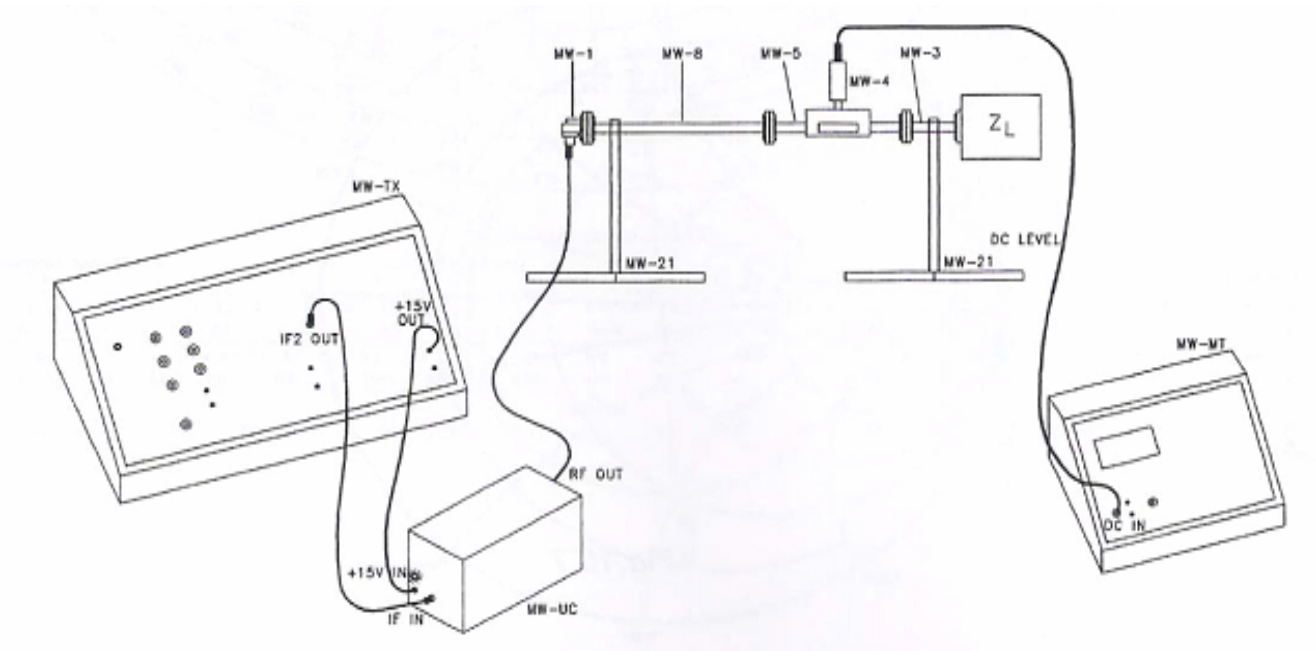

Figure 4

PROCEDURE:-

1. Carry out wiring between the unit as indicated in *Figure 4*.
   (note that the final transition with the coaxial attenuator module MW-23 represent the unknown load that is to be measured).
2. Take care to the connection between the transmitter unit and the input of the UP-converter unit (side in which there are the led and the power supply input!)
   SW1=1
   SW2=1
   SW3= Direct
   LEVEL= -25
3. Set the meter unit in the following operating mode:
   SW1 = 100 mV
   SW2 = ON
4. Power the two units the start up switch set on the rear side
5. Move the trailer of the slotted guide to the unknown impedance (adapter plus attenuator)
6. Note that the values expressed during the exercise could be different as the impedance is not ideal
7. Move the trailer and note the position of the first minimum **(D** m1= **D** L)
8. Move the trailer and note the position of the first maximum (**D**M1) and calibrate the instrument to the maximum indication.
9. Move the trailer and note the position of the second minimum **D**m2 and measure the VSWR on the instrument.
10. If **λg/2** is equal to the distance between the two minimum values, calculate **λg** that will be equal to about 4 cm.
11. Change the adapter and coaxial attenuator with the short circuit
12. Move the trailer and find the new first minimum value, next to the last (**D**s)
13. Check again the measurement of **λ g/2.**
14. Calculate the distance between the two first minimum values as expressed by the formula
    D min = (D L **–D** S**) / λ g**
15. On the smith chart plot, the circle corresponding to VSWR. Move the distance **D min towards** generator from the short circuit point and draw a line from this new position to the center of smith chart.
16. The cross point **B** of **SWR** circle and line provides the normalized resistive and reactive component of the unknown impedance, read about
    R/Z o
    X/Z o
17. The impedance Zo is in this case the impedance of the wave guide that can be calculated with the following formula:

$$\mathbf{Z}_g = \mathbf{Z}_\circ = \frac{120\pi}{\sqrt{1-\left(\frac{f_c}{f_\circ}\right)^2}} = \frac{120\pi}{\sqrt{1-\left(\frac{\lambda_\circ}{\lambda_c}\right)^2}}$$

    Where, $\mathbf{f}_e$ = cut off frequency =**c**/ λ **c=** 7.870 GHz and **fo** = frequency in free space
18. At the frequency of 10.7 **GH**z, λ_o=2.8cm, calculate the used waveguide (λ c=2a=3.81cm) characteristic impedance.
19. Calculate the values of R and X.

OBSERVATIONS & CALCULATIONS:-

Dimensions of the waveguide a=_____cm; b=_____cm
Mode of propagation= TE10
Frequency of operation=10.7GHz
Cutoff Frequency of guide = 7.870GHz.
Characteristic impedance of waveguide=_____ohm
Wavelength in free space λ_o =_____cm

Terminations	DMI	Dml	Dm2	λ g=2(Dm2-Dml)		Vmax	Vmin	VSWR
unknown load								
short circuit								

DL = _____; DS _____

D_{MIN} = (DL-DS) / λg

From smith chart: R/Z_o =_____; X/Z_o =_____

$$\mathbf{Z}_o = \frac{120\pi}{\sqrt{1-\left(\frac{f_c}{f_\circ}\right)^2}} = \frac{120\pi}{\sqrt{1-\left(\frac{\lambda_o}{\lambda_c}\right)^2}} =$$

R= _____; **X**= _____

RESULT:-

LAB SESSION 12

OBJECT:-

To investigate the properties a dipole antenna in free space

EQUIPMENT:-

Feedback Antenna Lab 57-200.
Pentium 4 or equivalent computer.

THEORY:-

Antenna: an antenna is a transducer designed to transmit or receive radio waves which are a class of electromagnetic waves. In other words, antennas convert radio frequency electrical currents into electromagnetic waves and vice versa. Antennas are used in systems such as radio and television broadcasting, point to point radio communication, wireless LAN, radar and numerous other applications. Antennas usually work in air or outer space, but can also be operate under water or even through soil and rock at certain frequencies.

Physically, an antenna is an arrangement of conductors that generate a radiating electromagnetic field in response to an applied alternating voltage and the associated alternating current, OR can be placed in an electromagnetic field so that the field will induce an alternating current in the antenna and a voltage between the terminals.

Simple Dipole Antenna: the dipole antenna is simply two wires pointed in the opposite directions arranged either horizontally or vertically, with one end of each wire connected to the radio and the other end handing free in space. This is the simplest practical antenna and it is used as a reference model for other antennas. Generally, the dipole is considered to be omni directional in the plane perpendicular to the axis of the antenna, but it has deep nulls in the directions of the axis.

Radiation Pattern: the radiation pattern is a graphical depiction of the relative field strength transmitted from or received by the antenna. As the antennas radiate in space often several curves are necessary to describe the antenna. If the radiation of the antenna is symmetrical about an axis (as is the case in dipole, helical and some parabolic antennas) a unique graph is sufficient.
Each antenna supplier/user has different standards as well as plotting formats. Each format has its own advantages and disadvantages.

PROCEDURE:-

Proceed to power up the PC and the trainer. Click on the Discovery II IMS icon on the PC desktop and select the desired practical as shown in the *Figure 1* below.

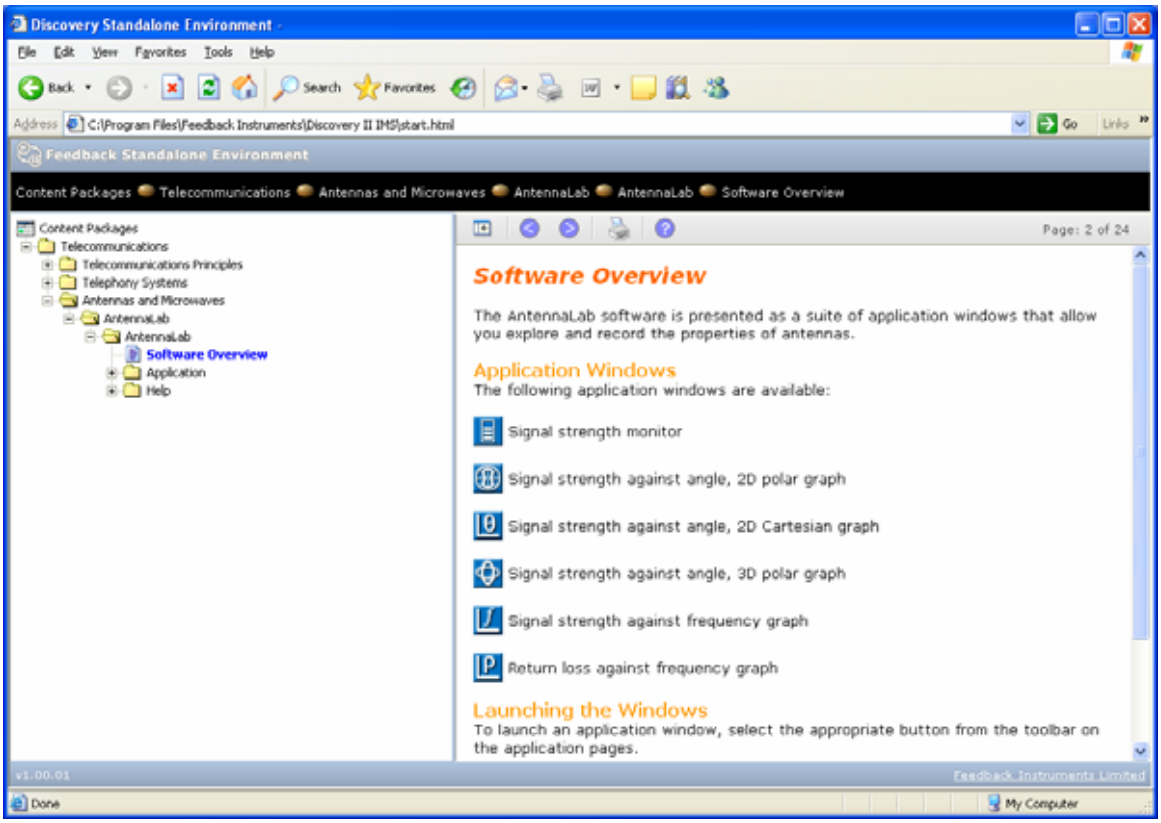

Figure 1

For Plots of the Radiation Pattern click on the following icon in the software to activate the respective function.

 To launch the 2D polar graph window.

 To launch the 2D Cartesian graph window.

 To launch the 3D polar graph window.

To create a new plot, select 'File' then 'New Plot'. Enter the desired frequency and start.
To open an existing plot, select 'File' then 'Open Plot'
To save a plot, select 'File' then 'Save Plot [plot name]...'

NOTE: before running the equipment it is best to calibrate it (which would have already been done for you). For this you must disconnect the RF coaxial cable (which connects the transmitting test antenna with the generator) because the generator motor does an initial test. This, is so that the RF coaxial cable is not ***stretched excessively*** during the test phase. Excessive stretching may result in breakage of the cable.

Also, it is best to perform this experiment in a lab/room with a fairly open area (*Why?*). The distance between the transmitter and receiver should also be about three metres. The distance between the transmitter and PC should be about 2 metres. Both Transmitter and receiver should be at the same height from the ground.

OBSERVATION:-

RESULT:-

LAB SESSION 13

OBJECT:-

To observe the working of a Yagi Uda Antenna.

EQUIPMENT:-

Feedback Antenna Lab 57-200.
Pentium 4 or equivalent computer.

THEORY:-

Antenna: an antenna is a transducer designed to transmit or receive radio waves which are a class of electromagnetic waves. In other words, antennas convert radio frequency electrical currents into electromagnetic waves and vice versa. Antennas are used in systems such as radio and television broadcasting, point to point radio communication, wireless LAN, radar and numerous other applications. Antennas usually work in air or outer space, but can also be operate under water or even through soil and rock at certain frequencies. Physically, an antenna is an arrangement of conductors that generate a radiating electromagnetic field in response to an applied alternating voltage and the associated alternating current, OR can be placed in an electromagnetic field so that the field will induce an alternating current in the antenna and a voltage between the terminals.

Yagi Uda Antenna: the Yagi Uda antenna is a directional variation of the simple dipole antenna. There are parasitic elements added with the functionality similar to adding a reflector and lenses (directors) to focus a filament light bulb. In the six element Yagi Uda antenna there are four directors and one reflector with a driven element in between. Its radiation pattern is not symmetric.

PROCEDURE:-

Proceed to power up the PC and the trainer. Click on the Discovery II IMS icon on the PC desktop and select the desired practical as shown in the *Figure 1*.

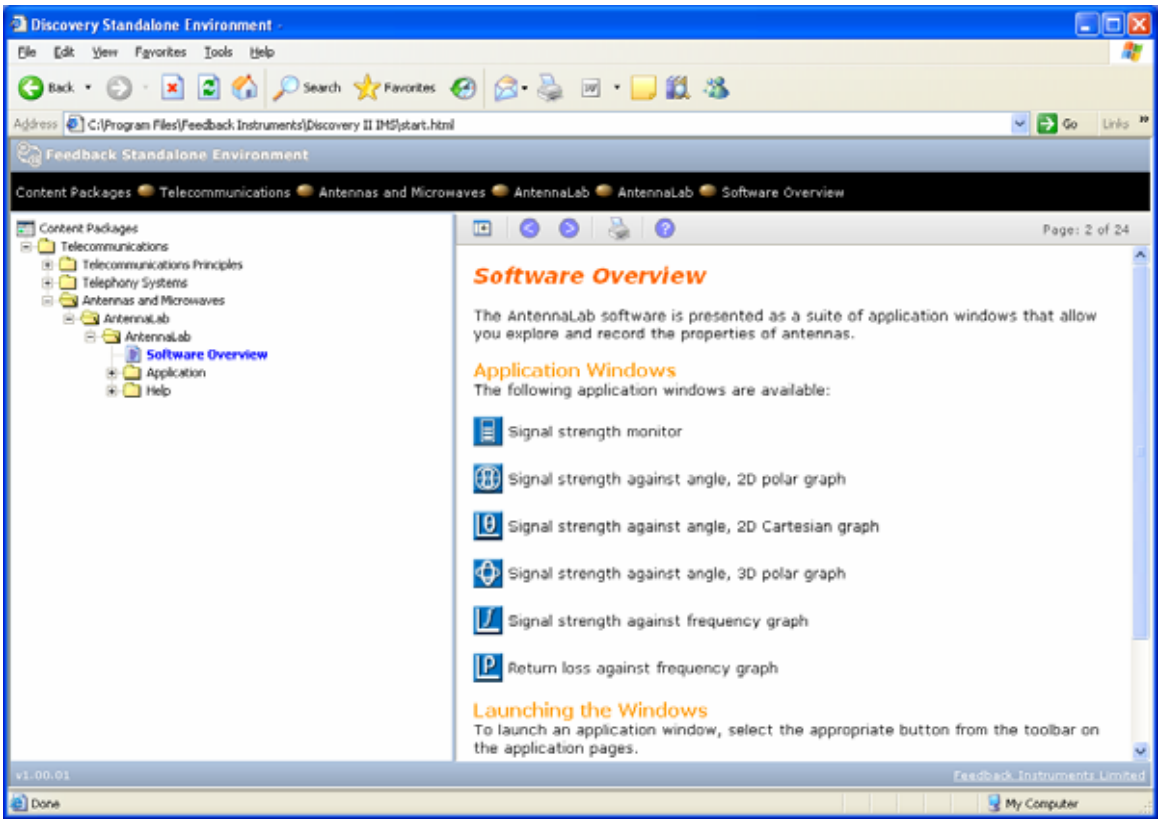

Figure 1

For Plots of the Radiation Pattern click on the following icon in the software to activate the respective function.

 To launch the 2D polar graph window.

 To launch the 2D Cartesian graph window.

 To launch the 3D polar graph window.

To create a new plot, select 'File' then 'New Plot'. Enter the desired frequency and start.
To open an existing plot, select 'File' then 'Open Plot'
To save a plot, select 'File' then 'Save Plot [plot name]...'

NOTE: before running the equipment it is best to calibrate it (which would have already been done for you). For this you must disconnect the RF coaxial cable (which connects the transmitting test antenna with the generator) because the generator motor does an initial test. This, is so that the RF coaxial cable is not ***stretched excessively*** during the test phase. Excessive stretching may result in breakage of the cable.

Also, it is best to perform this experiment in a lab/room with a fairly open area (*Why?*). The distance between the transmitter and receiver should also be about three metres. The distance between the transmitter and PC should be about 2 metres. Both Transmitter and receiver should be at the same height from the ground.

OBSERVATION:-

RESULT:-

LAB SESSION 14

OBJECTIVES:-

To become familiar with the use of 4 telephones connected to the local switching centre.

EQUIPMENT:-

Teknikit 58 series digital telephony kit, 58-digital WB (USB).

THEORY:-

Local Signalling: The signalling between the telephone user, and the local Switching Centre is known as local signalling.
The signals available to the user are the Switch Hook and the Keypad. The Switch Hook operates as soon as the telephone is lifted. This is the **Off Hook** state of the telephone, and is recognised by the Switching Centre. The Keypad is primarily used to send the Destination Address to the Switching Centre; that is the number of the telephone to which the connection is required.

Dual Tone Multi-Frequency (DTMF) signalling: The signals are in the form of a combination of two audible tones, a different combination for each number on the Keypad. Hence it is known as Dual Tone Multi-Frequency (DTMF) signalling.
The Switching Centre can send signals to the user, by using *tones* and by *ringing* the bell or alerter in the telephone. The audible tones are known as **call progress tones**, and indicate to the user important responses of the Switching Centre. Obviously they are only useful if the user is listening to the telephone. If the telephone is not in use, i.e. if it is on hook, then the Switching Centre can *ring* it.

ITU-T Standards: Standards for the telephone industry are agreed by an international body. Up to 1994 it had a French name, Comite Consultatif International de Telegraphique et Telephonique (CCITT). Since then it has been known as the Telecommunications Standardisation Sector of the **International Telecommunications Union (ITU-T).**The ITU-T produced a Standard Recommendation E.180 for the tones used in local signalling.
Each telephone system is run by an Administration, sometimes a public Administration, usually running the whole telephone system in one country, and sometimes privately owned. Historically each Administration has often used different tones for the same purpose. The ITU-T Recommendation aims to reduce these differences so that in international calls operators and users understand easily the meaning of the tones. The Recommendation includes 'acceptable' tones for each purpose, and 'recommended' tones for new systems. The general nature of each tone, and the acceptable and recommended limits are:

Dial Tone: should be a continuous tone, either a single frequency in the range 400-450 Hz, with 425 Hz preferred, or a combined tone of up to 3 frequencies, with at least one frequency in the ranges 340-425 and 400-450 Hz, with at least 25 Hz difference between any 2 frequencies.However any existing dial tones, including interrupted tones are acceptable, because of the technical and social difficulties of changes.

Ring Tone: is a slow period tone, in which the tone period is shorter than the silent period. The recommended limits are 0.67 to 1.5 seconds for the tone and 3 to 5 seconds for the silence; and the acceptable limits are up to 2.5 sec and up to 6 seconds respectively. The recommended frequency is 400-450 Hz, with 425 Hz preferred; and the acceptable range is 340-500 Hz.

Busy Tone: is a quick period tone, with the tone and silence periods equal. The total duration of both tones is recommended to be 0.3 to 1.1 seconds; and the ratio of tone to silent period should be between 0.67 and 1.5. The recommended frequency is 400-450 Hz, with 425 Hz preferred; and the acceptable range is 340-500 Hz.

Number Unobtainable Tone: no recommendations are made.

System Operation: The normal use of the 4 telephones connected to the local Switching Centre is demonstrated in this Practical. By using the telephones to make calls, the basic operation of the Switching Centre is examined. The telephones use single digit numbers. The numbers to be dialled correspond to the Line numbers L1 to L4 shown on the Workboard i.e. 1, 2, 3 and 4. *Figure 1.*

The system uses 4 Call Progress Tones: Dial tone, Ring tone, Busy tone and Number Unobtainable (NU tone). Using the telephones the tones can be heard. Also the connection of them can be seen on the Switching Centre diagram. Ringing the telephone requires a much larger voltage than the acoustic Tones. This is indicated by a different colour inside the Switching Centre diagram. The Digital Switching Centre Workboards used for this can operate as one of two types, **A** or **B**. The workboard used for the single Switch Assignments, must be set to type **A**, by the ***Switching Centre Type*** switch at the far right hand corner of the board. If two boards are connected, the other should be type B, and is not used for these Assignments.

PROCEDURE:-

- One Digital Switch Centre: if there is only one digital switch centre and telephone tray (58-122 and 58-123) connected to the system controller 58-121, make sure the Switching Centre Type Switch is set to ‘A’.
- Two Digital switch Centres: If there are two Digital Switch Centres and Telephone Trays (58-122 and 58-123), one Switching Centre Type Switch should be set to ‘A’ the other to ‘B’. A ‘Curly’ trunk cable should interconnect the ‘Trunks’ connectors. Use Switch Centre ‘A’ for the practicals.

- Two Digital Switch Centres plus a Trunk Networks Board: If there are two Digital Switch Centres and Telephone Trays (58-122 and 58-123) and a Trunk Networks Board, 58-140 included in the setup, one switching Centre Type Switch should be set to ‘A’ and the other to ‘B’. ‘Curly’ trunk cables should interconnect the ‘Trunks’ connectors. Use Switch Centre ‘A’ for the practicals.
- The numbers for the telephones for the first Assignments correspond to the line numbers on the work board, i.e. 1 to 4. The tones are preset but non-standard.
- Put all 4 telephones face down (On Hook).
- Pick up telephone 1. Dial Tone is heard, and the connection is shown on the diagram. Press button 2. Ring Tone and Alerting (Ring) are applied to telephones 1 and 2. Pick up telephone 2. Speak into one of them to check the connection.
- While the first connection is held, pick up telephone 3 and press button 1. Busy Tone is heard. Then replace telephone 3.

- Replace telephone 2. Is the connection broken? Replace telephone 1.
- Using any telephone, listen to Dial Tone, and then press button 8. Number Unavailable Tone (NU Tone) is heard.
- Try out other connections.

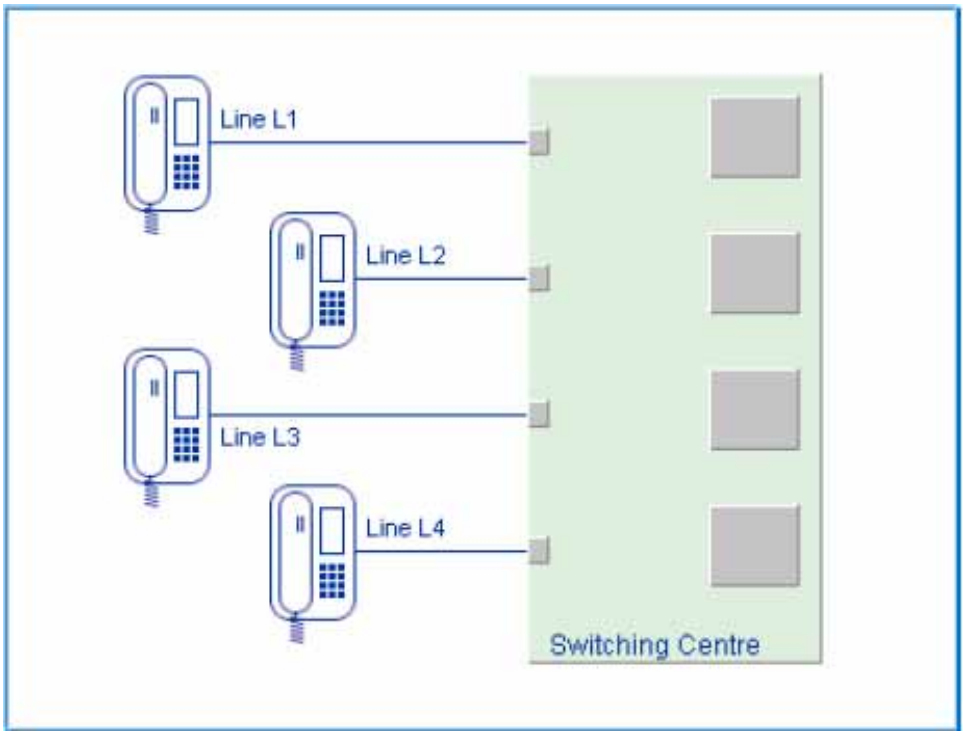

Figure 1

OBSERVATIONS:-

If a call is made from telephone 1 to telephone 2, what happens if telephone 2 is replaced (Switch Hook pressed), and then picked up again?

_____

With the same call what happens if telephone 1 is replaced? What is this known as?

_____

_____

RESULT:-

LAB SESSION 15

OBJECT:-

To become familiar with Time Switching in digital telephone system.

EQUIPMENT:-

Teknikit-58 series digital telephony kit, 58-digital WB (USB).

THEORY:-

Digital Transmission: Digital telephone signals use a synchronous transmission system, which combines **Time Division Multiplexing** (TDM) and **Pulse Code Modulation** (PCM). Each speech path has to send an 8 bit binary code at a rate of 8000 codes per second. The codes are organised into groups called **frames.** Each code is transmitted in a timeslot. The frames include special synchronising codes so that each timeslot can be identified and the code correctly converted back to analogue form.

In the **CEPT system** which originated in Europe there are 32 timeslots in each frame. Each frame takes 125 µs, and each 8 bit timeslot is transmitted in 3.9 µs, at a rate of 2.048 Mbps. In the **T1 system** which was designed in North America there are 24 timeslots in each frame. Each frame also takes 125 µs, and so each 8 bit timeslot is transmitted in 5.2 µs. An extra bit is used for synchronising so the transmission rate is 1.544 Mbps.

The connection to each telephone uses 2 wires which carry analogue signals in both directions. For Digital Switching, incoming and outgoing speech are separated by hybrid circuits. Then combined Codec/Filter circuits provide analogue to digital and digital to analogue conversion *Figure 1*.

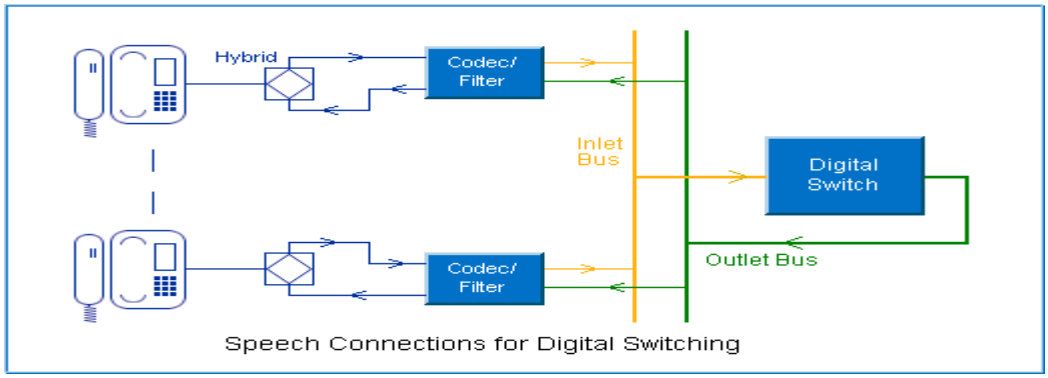

Figure 1

The **Codec/Filter** circuits are connected to the Digital switch through **Inlet** and **Outlet** Busses. Each Bus can carry up to 24 or 30 speech connections, depending on the PCM system in use. Each Codec is connected to the Inlet and Outlet Busses at a designated time; for the period of one timeslot.

Basic Digital Switching: The Digital Switch transfers the contents of each timeslot in the Inlet Bus to the appropriate timeslot in the Outlet Bus. Switching of the data from each timeslot in the Inlet Bus requires changing the time at which the data is transmitted along the Outlet Bus. The process is known as **Time Switching** or **Time Slot Interchange**.

Time Switching: The basic process in **Digital Switching** for telephone systems is the transfer of 8 bits of digital data from one Timeslot to another. The speech signals from each telephone are connected through a Codec to the Switch during a specified Timeslot. The connections are made along **Inlet** and **Outlet** serial busses. The simplest connection between 2 telephones occurs if they are both using the same Inlet and Outlet busses. They must, of course, use different Timeslots. Then 8000 times per second the contents of the Inlet Timeslots for each telephone must be transferred to the Outlet Timeslots of the other. This is ***Timeslot Interchange or Time Switching***. The Timeslots are organized in **Frames**. Each Frame has 32 (CEPT systems) or 24 (T1 systems) Timeslots. Successive Frames are transmitted along the same physical connections i.e. the same Inlet and Outlet busses.

The data for transmission is only available briefly, and the display flashes to suggest this. Of course the actual data transmission is very much faster than the flashing. For convenience one digit dialing is still used in this Assignment (Line numbers 1 to 4).

PROCEDURE:-

PART A. Time Switching

1. Switching between 4 telephones, all of them connected to one bus. The data is only available briefly in each timeslot, as suggested by the flickering display *Figure 2*.
2. Make a connection between any two telephones. They have numbers 1 to 4. Observe which timeslots have their contents exchanged to carry the speech signal from one telephone to the other.
3. Make another connection without breaking the first one and observe the new timeslot interchange.
4. Clear the connections and make new connections.

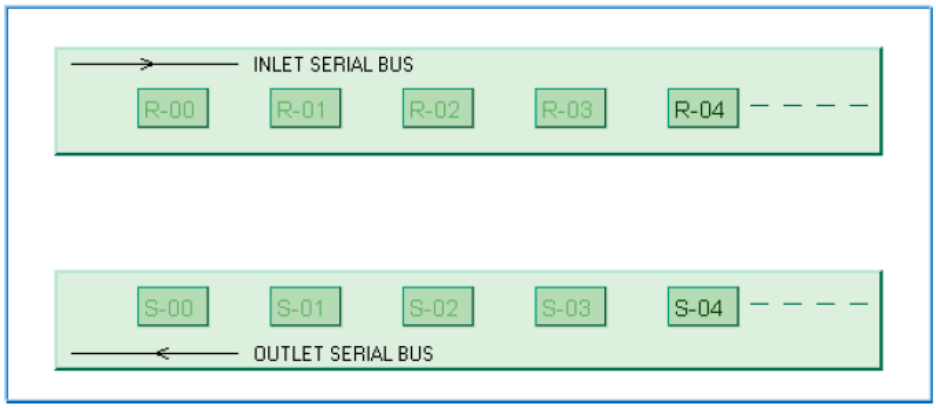

Figure 2.

RESULT:-

What is the essential process of Digital Switching?

_____

How many data transfers between timeslots are required for one telephone connection?

_____

How often are the data transfers made?

_____